ELECTRIC POWER SYSTEM DEVELOPMENT STRATEGY

STATEMENT OF PRINCIPLE

Electricity is an essential commodity for most individuals, businesses, and industries in Kosovo, and therefore must be available in a stable, reliable and reasonably priced manners.

Kosovo's current electrical industry is undergoing a transformation from a vertically integrated monopoly. Future electricity production will be subject to increased regional competition and higher environmental standards.

Because electricity is so important to individuals and to industrial sectors, public policy must take balanced approach and phase in the competition over a prudent time frame. Over the medium term, the introduction of increased competition will encourage new market entrants for domestic and export electricity supply.
Appropriate regulatory framework will be introduced to that respect.

Advantage of having an abundant an economical domestic resource – lignite should attract private sector and result in a more market-driven electricity industry and improved efficiencies for all customers. These changes will result in sustainable electricity supply for Kosovo. This scenario is based on private sector principles that recognize the need for fair rates of return for investors and a consistent, predictable business climate that encourages new investments.

BACKGROUND

Electric Power System Overview

Kosovo power system is dominated by vertically integrated monopoly – KEK - that operates lignite mines, 2 lignite power plants, transmission and distribution network, and a dispatching center. The only significant power plant outside KEK is hydro power plant Gazivode (2x17.5 MW) that is operated by an irrigation company (Hidrosistem Ibar-Lepenac).

Although nominally the installed capacities are sufficient to meet the Kosovo demand, due to the years of inadequate maintenance, the reliability of the plants and equipment is seriously affected, hence actual capacities have been considerably reduced.

Technical losses in the system are high and above industry average (~20%). This is further compounded by very high commercial losses (~41% in 2002).

Due to the massive financial support of the donors, the supply situation was about to start improving, when two consecutive severe accidents happened at power plants and mines in 2002, which seriously crippled system ability to meet the demand. Now the system is in dire need to immediately stabilize supply, and than to provide for secure supply in the near and medium term period.

Having sign to the Memorandum of Understanding (MoU) on establishment of Regional Electricity Market (REM) in South East Europe, ("Athens Memorandum"), the Strategy is committed to search for solutions to the supply problems within the framework of regional integrations as initiated by the Athens process.

Neighboring Power Systems

Kosovo power system has direct interconnection lines to the systems of Albania, Montenegro, Serbia and FYROM [Table 1]. All of these systems are net electricity importers, except Serbia. This fact presents an opportunity for a potential investment in a new export oriented, lignite based power plant in Kosovo.

In addition, Albanian system is almost 100% hydro based, while Kosovo's is ~100% thermal based. These complementarities offer opportunity for close cooperation between the systems, and optimized power exchanges, i.e. based power form Kosovo for peak power from Albania.

Table 1. Basic data on Kosovo's and neighboring power systems.

Country	Electricity consumption in 2001 [GWh]	Installed capacity [MW]	Structure of installed capacity	NET
Albania	5,432	1,629	Hydro: 93.7% Gas/Oil: 6.3%	Importer
Montenegro	4,126	868	Hydro: 76.7% Coal: 23.3%	Importer
Kosovo	3,106	1,513	Hydro: 3.2% Coal: 96.8%	Importer
Serbia	31,045	7,430	Hydro: 37.3% Coal: 62.7%	Exporter
FYROM	6,251	1,524	Hydro: 30.7% Gas/Oil: 14.5% Coal: 54.8%	Importer

Source: KfW Regional Study of Electricity Supply and Demand in South East Europe

Creation of a Regional Electricity Market

Strategy recognizes the fact that a Regional Southeast Europe Electricity Market will be created by the year 2006, as committed by the signatories of the so-called "Athens Memorandum".

The Regional Market will create new reality for power system development planning of Kosovo, but also for the other market members too.

The future market covers the area that is known as 2nd UCTE Synchronous zone (see Figure 1). By the time the Regional Market is up and running, two UCTE zones will be re-synchronized and a single European Electricity Market will be established.

This offers significant opportunities for Kosovo:

- potential to attract investors to utilize lignite resources for export oriented new power plants;
- to improve security of supply through power exchange arrangements with other power systems, that are members of the market.

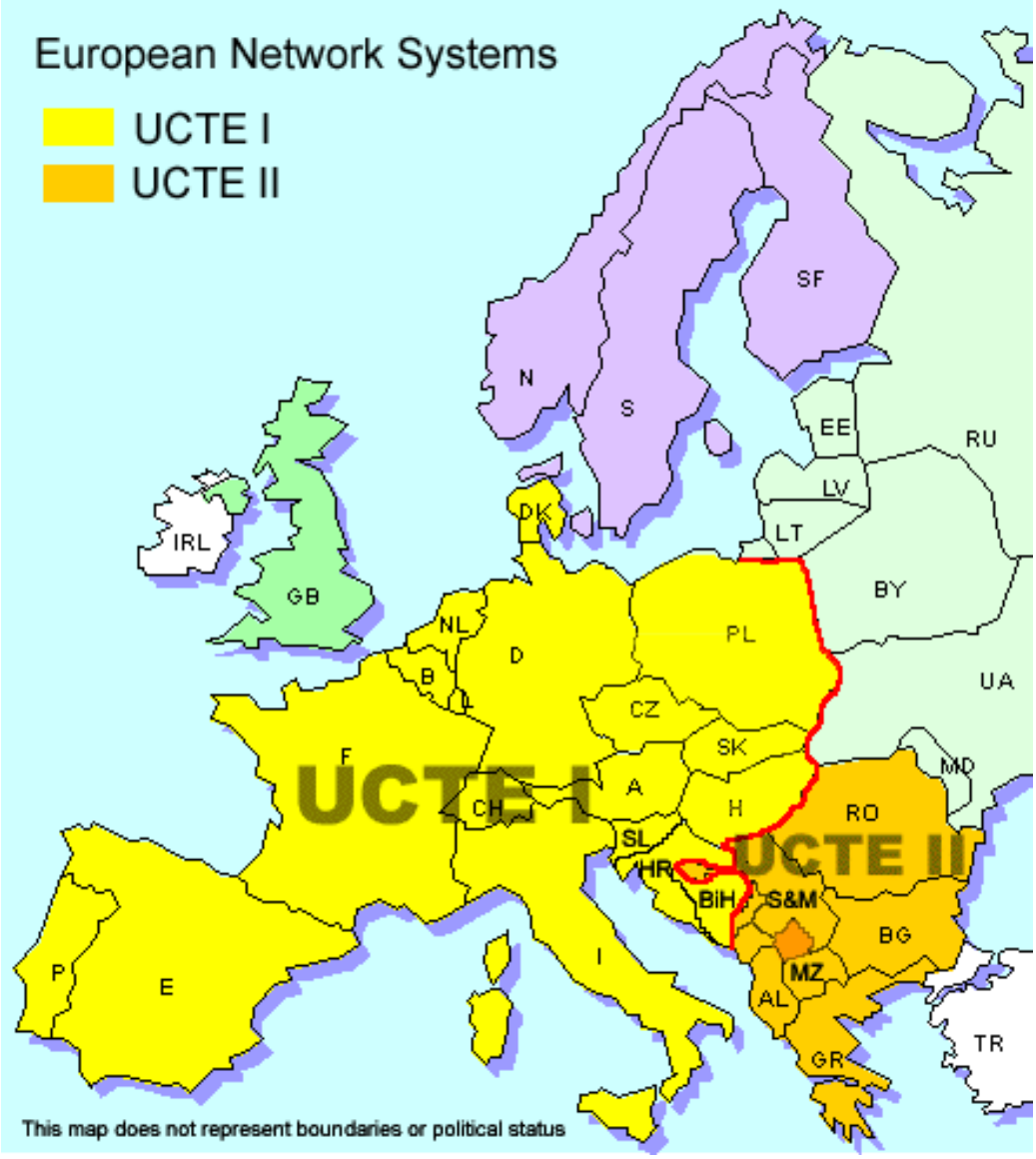

Figure 1. European Network Systems

The "Athens Memorandum"

Adhering parties:

Albania
Bosnia & Herzegovina
Bulgaria
Croatia
Greece
Romania
Turkey
Serbia and Montenegro
F.Y.R. of Macedonia
UNMIK Kosovo
Italy

Observers

Austria
Hungary
Moldova
Slovenia

Demand

Prior to the 1999 conflict, annual electricity generation was in the order of 4,500 GWh, out of which 60-80% was consumed in Kosovo, and the rest was exported. In 2000 the energy consumption was 2,869 GWh and in 2001 it was 3,111 GWh. In the last 10 years a pronounced change has taken place in the share of electricity consumption among the different categories: households' and services' shares increased from 26% to 75% and from 7% to 13% respectively, while industry's share dropped from 67% to 12%. The total number of customers is estimated to about 360,000. The use of electricity for heating account for 64.2% of supplied energy and the ratio between the monthly energy consumption in December and in July is 2.4 for the same reasons.

Forecasting of the total electricity consumption by the year 2020 [Table 2] was done by the World Bank ESTAP project with respect to the relationship between GDP and electricity consumption per capita (in kWh/cap). The methodology is described in details in the World Bank report [ ].

Table 2. Electricity consumption forecast 2000 - 2020

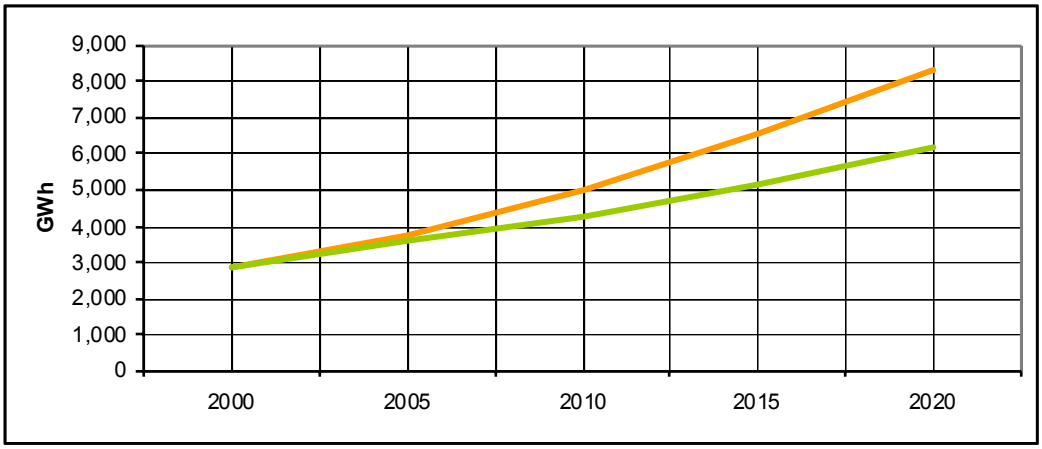

Annual growth rates:

High = 7%
Medium = 5%

Source: ESTAP

In the absence of an official economic development strategy, two scenarios were analyzed: medium and high growth, and they provide a range of future energy demands [Table 3].

Table 3. Two growth scenarios for future energy demand

	2000	2005	2010	2015	2020
HG – annual growth rate 7%					
GWh	2,869	3,769	4,988	6,519	8,353
MW	653	796	1,061	1,424	1,960
MG – annual growth rate 5%					
GWh	2,869	3,586	4,272	5,137	6,168
MW	653	749	890	1,081	1,296

The demand forecast has to be regularly updated whenever more accurate data become available on economic activates and future development plans, but in principle every 2-3 years.

Generation

Electricity in Kosovo is produced by two lignite-fired TPP Kosovo A and Kosovo B with total installed generation capacity of 1,513 MW [Table 4]. Most of the units of the two thermal plants are in poor operating conditions so that the present available capacity of the system is only 841 MW. Overhauling and rehabilitation works have been carried out or are underway on most of the units. The total production in 2000 was 1,914 GWh and rose to 2,568 GWh in 2001.

Table 4. Existing generation facilities in Kosovo

Power Plant	Unit	Installed Power [MW]	NET Power [MW]	NET Available Power [MW]	Fuel	Start of operation
Kosovo A						
	A1	65	58	30-40	L/N	1962
	A2	125	113	0	L/N	1964
	A3	200	182	130/145	L/N	1970
	A4	200	182	120/145	L/N	1971
	A5	210	187	135/150	L/N	1975
Kosovo B						
	B1	339	309	230/250	L/M	1983
	B2	339	309	230/250	L/M	1984
HPP Ujman						
	G1	17.5	17.5	17.5		1983
	G2	17.5	17.5	17.5		1983

L/N = Lignite/nafta
L/M = Lignite/mazout

Source: KEK

During the period 1999-2003, electricity supply from local sources has not been fully stabilized.

Additionally, due to the serious accidents at Kosovo B in July 2002, and latter on a land slide that occurred in Bardh mine in November 2002, the electricity supply became severely disruptive, and an obligatory reduction revolving scheme was imposed that will be in force through most of the 2003, and possible 2004.

Assuming resumption of normal operation of power plants and mines, the electricity supply from domestic generation with some power exchanges from the neighboring systems can meet the demand until the year 2008-2010.

Unique Properties of Electricity

Electricity is a real-time commodity that must be produced and delivered on demand. It is not feasible to store it in significant quantity without major pumped-storage hydro facilities. Kosovo electricity providers must, therefore ensure adequate generation, transmission and distribution to service peak-power demands. The system operator is required to maintain generation/supply reserve margin of at least 20%.

Future power generation and supply

2003 – 2008

The exiting situation as of April 2003 seriously affects normal life of all citizens and is detrimental to businesses and economic development, and therefore is unacceptable to be allowed to continue into 2004 or even longer.

TO RESTORE URGENTLY NORMAL LEVEL OF SUPPLY TO THE PAYING CUSTOMERS!

Therefore the Strategy endorses the following measures in order to bring the noticeable improvement in power supply:

Urgent and dramatic reduction of commercial losses and illegal connection;
Stand-by arrangements for import of electricity in order to avoid another winter of severe supply reductions;
Overall institutional set up and reform action plan;
Power exchange arrangements with the neighboring system;
Preparations to strengthen interconnection capacity toward Albanian power system;
Upgrading dispatching center to improve powers system control and facilitate power exchanges;
Improving efficiency and availability of existing power plants through improved regular maintenance procedures;
Reduction of technical losses;
Strengthening of KEK's management, operational and technical capabilities, and improvement of corporate governance;
Offering management or concession contracts for the units of Kosovo A in order to increase the output and/or extend the life time of the power plant;
Start immediate preparation for construction of a new lignite based power plant by an IPP with participation of International Financial institutions;
Start construction of a new lignite based power plant with the capacity in the range 300 –900 MW.

PREPARE FOR AND START CONSTRUCTION OF A NEW POWER PLANT!

2009 and beyond

It is expected that by the year 2009 a new power plant will be constructed and operational which will bring about lasting improvement and stabilization to the power supply of Kosovo.

The update studies on demand forecast need to be prepared. They will serve as a basis for an updated power generation expansion plan.

By 2009 Kosovo will be already a part of a Regional electricity market in South East Europe, and the benefit of economical lignite deposits should be utilized to attract private investors to build needed power plants for Kosovo demand, and for power export to the regional market.

Construction of two additional thermal power plants is foreseen with capacities based on demand increase in Kosovo, and increased export potential to the regional Market.

Transmission Network

The total length of transmission lines (400, 220 and 110 kV) is 1,162 km. During the conflict the transmission network, especially the 400 kV portion, was partially destroyed. Most of the transmission lines are now back in operation following recent repairs, while substations are still in bad technical condition.

The 400 kV and 220 kV transmission network of Kosovo power system is an integral part of the regional interconnected transmission system [Figure 2]. The Kosovo system is part of the 2nd UCTE (Union for the Co-ordination of Transmission for Electricity) synchronous zone [Figure 1].

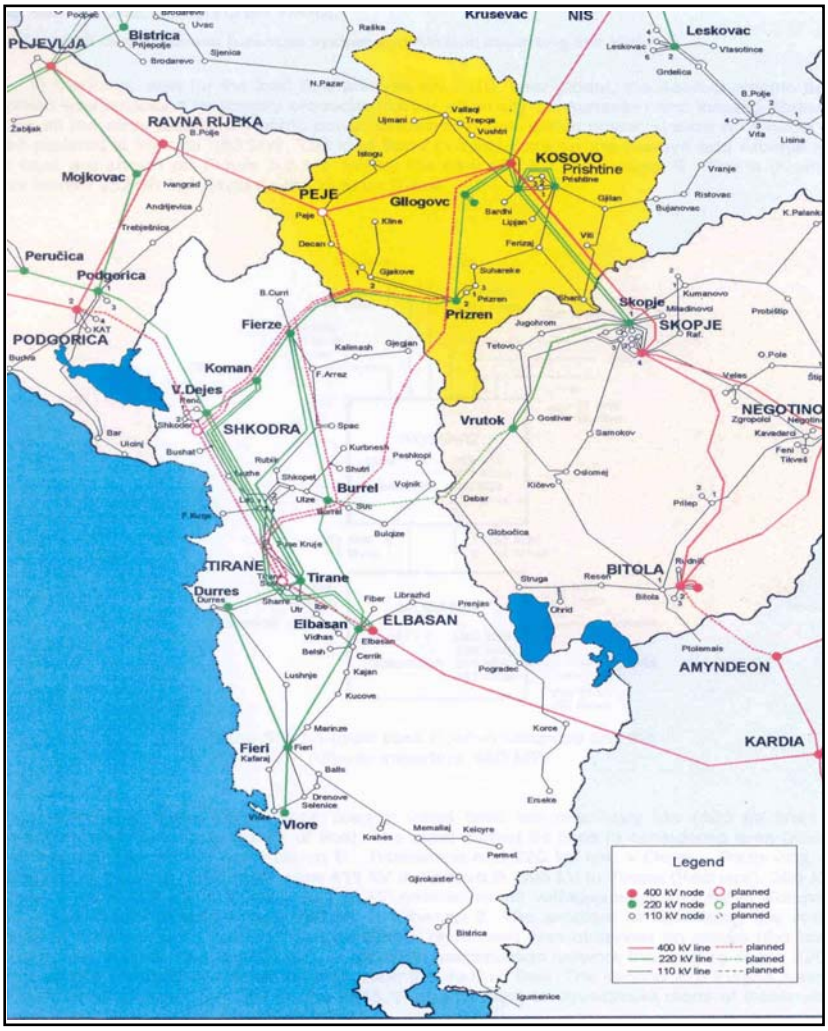

Figure 2. Regional transmission system

The transmission system is interconnected with all the neighboring systems at the 400 kV except with Albania, where interconnection is at 220 kV.

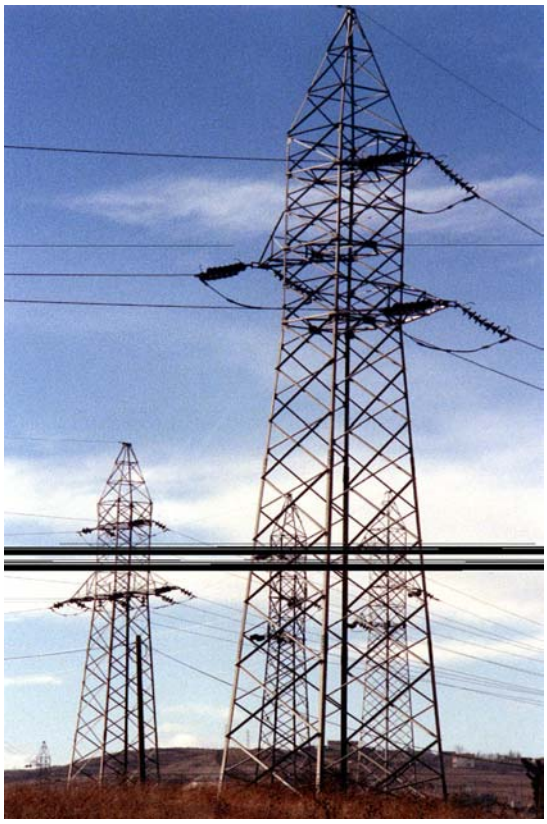

TRANSMISSION CAPACITY OF KOSOVO POWER SYSTEM

OVERHEAD LINES

Voltage level	Length [km]
400 kV	180,6
220 kV	353,13
110 kV	625,5

TRANSFORMERS

Voltage level	Capacity [MVA]
400/220	800
220/110	850 (1000*)

* one 150 MVA power transformer was destroyed

Table 5. Interconnection lines with neighboring countries

Kosovo Interconnection lines with neighboring countries			
FYROM	**Serbia**	**Albania**	**Montenegro**
1x400 kV	1x400 kV	1x220 kV	1x400 kV
2x220 kV	1x220 kV		
1x110 kV	2x110 kV		

This missing 400 kV interconnection line is considered vital for the realization of power exchanges between thermal power based Kosovo system and hydropower based Albanian system.

Transmission network is normally designed for peak load of a system. Therefore an export oriented generation strategy must be taken into account for its impact on the network design and development.

EXPORT ORIENTED GENERATION DEVELOPMENT CREATES ADDITIONAL DEMAND ON TRANSMISSION NETWORK DEVELOPMENT!

Construction of new generation units on 400 kV level will have a strong impact on the transformation capacity requirements at 400/220/110 kV levels.

A foreseen medium generation development scenario without export is as follows:

Table 6. Foreseen generation without export

	2002	2010	2020
Peak load of system (MW)	765	890	1296
Generation at 400 kV (MW)	411	928	1586
Generation at 220 kV (MW)	168	414	293
Generation at 110 kV (MW)	60	35	35

A foreseen generation development scenario with export is as follows:

Table 7. Foreseen generation with export

	2002	2010	2020
Peak load of system (MW)	765	890	1296
Generation at 400 kV (MW)	411	**1228**	**2482**
Generation at 220 kV (MW)	168	414	293
Generation at 110 kV (MW)	60	35	35

The current indicative values for Net Transfer Capacities (NTC) in Southeast European region for working days in peak hours (non-biding values) are given in the table bellow.

Table 8. Indicative values for Net Transfer Capacities (NTC) in region

	From	To	MW
1	**Kosovo**	**Serbia**	**600**
2	**Serbia**	**Kosovo**	**600**
3	**Kosovo**	**Montenegro**	**600**
4	**Montenegro**	**Kosovo**	**600**
5	**Kosovo**	**FYROM**	**600**
6	**FYROM**	**Kosovo**	**600**
7	**Kosovo***	**Albania**	**200**
8	**Albania***	**Kosovo**	**200**
9	Bulgaria	Greece	600
10	Greece	Bulgaria	700
11	Greece	FYROM	600
12	FYROM	Greece	500
13	Greece	Albania	200
14	Albania	Greece	200
15	Bulgaria	Serbia	600
16	Serbia	Bulgaria	600
17	Bulgaria	Romania	1000
18	Romania	Bulgaria	1000
19	Romania	Serbia	600
20	Serbia	Romania	600
21	Montenegro	Bosnia	500
22	Bosnia	Montenegro	500
23	Serbia	Croatia	600
24	Croatia	Serbia	500
25	Croatia	Bosnia	1000
26	Bosnia	Croatia	1000

*Above table shows net transfer capabilities between power systems in region without taking in consideration foreseen 400 kV line between Kosovo and Albania.

The critical parts of transmission system are:

- The 110 kV network, where the cross-section of some of the 110 kV lines is ACSR 150/25 mm2, which does not comply with reliability criteria;
- The insufficiency of the present transformation capacity between 400, 220 kV networks and 110 kV; and
- The bottleneck of present 220/110 kV transformer capacities in Kosovo A;
- Limited interconnection capacity to Albania.

Development of Transmission network

Maintaining an adequate transmission infrastructure is considered vital to development of robust, competitive, market-based generators!

Therefore strategy foresees the following stages in transmission network development based on previously mentioned generation increase scenario and on present transmission capacity.

2003 - 2008

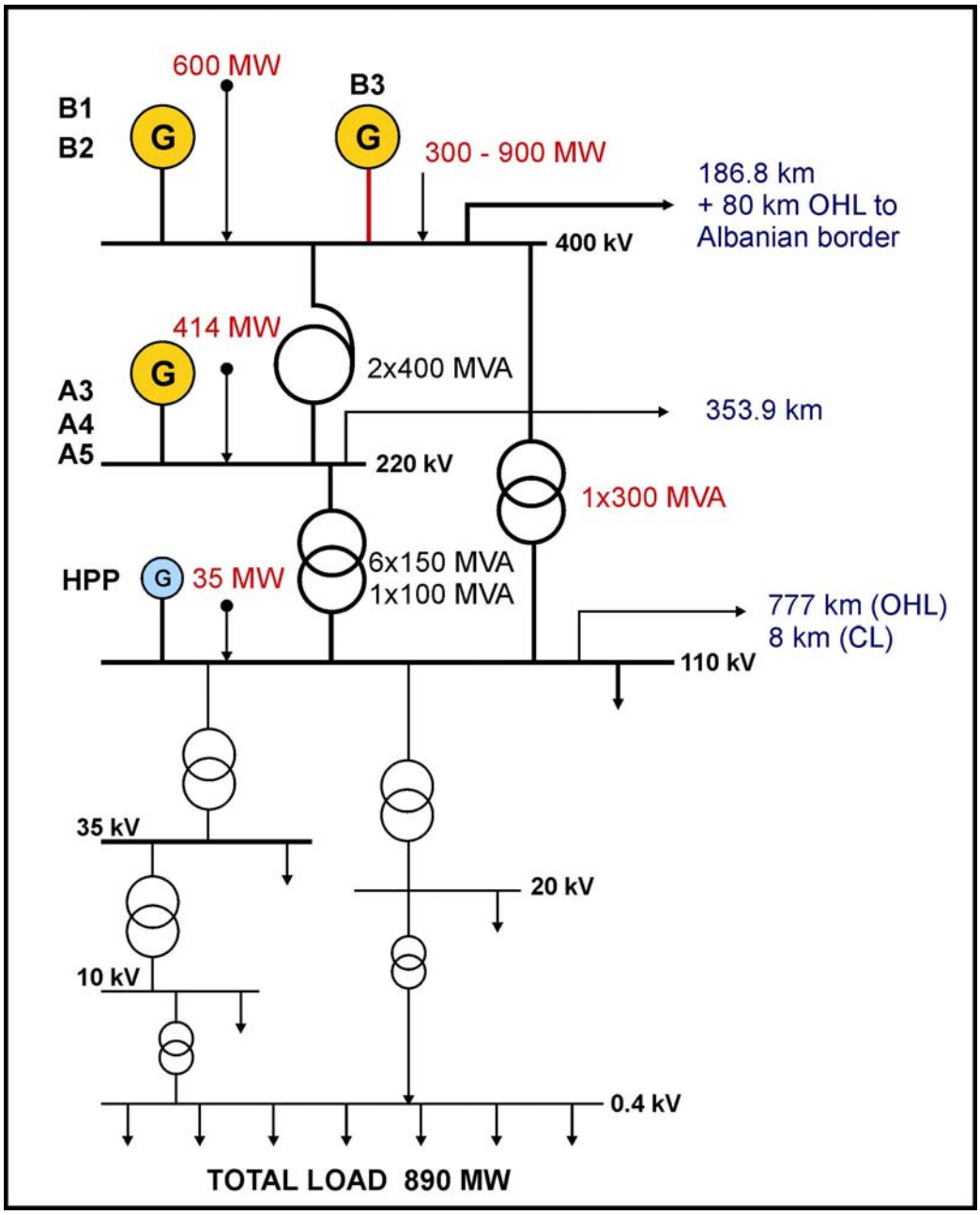

NEW 400 kV LINE TO ALBANIA IS OF CRITICAL IMPORTANCE!

NEW POWER TRANSFORMER OF 300 MVA HAS TO BE INSTALLED.

TRANSMISSION BOTLENECKS AT 110 kV LEVEL HAS TO BE ELIMINATED BY CONSTRUCTION OF ADDITIONAL 151,8 km OF OVERHEAD LINES.

Figure 3. Network structure at peak load in 2008 as foreseen by new generation strategy

The critical component of the medium term strategy is the 400 kV line to Albania.

2009 and beyond

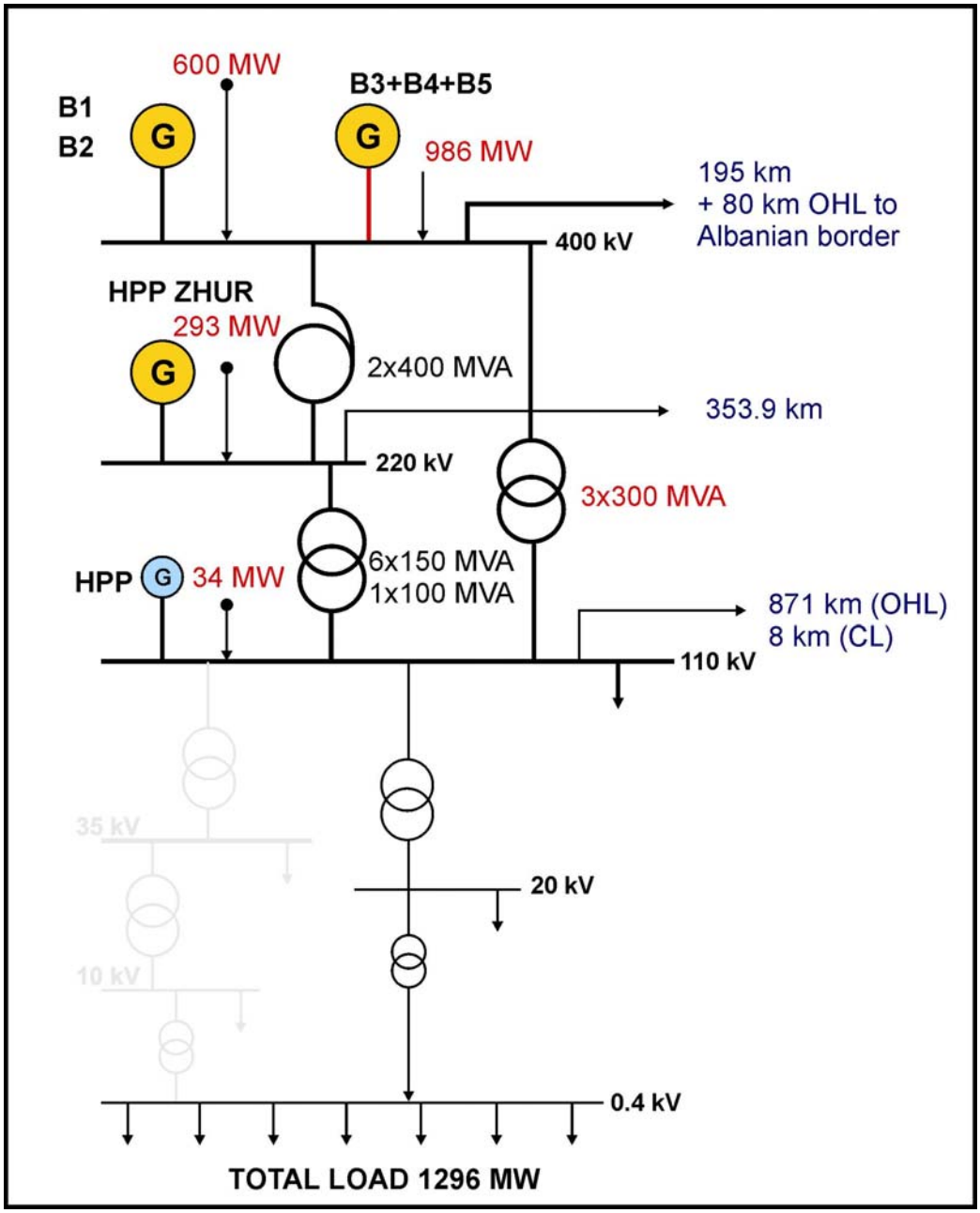

PEAK LOAD WILL REACH 1300 MW, SUPPLIED FROM 400kV NETWORK, HENCE ADDITIONAL TRANSFORMER CAPACITY 2X300 MVA WILL BE REQUIRED.

ADDITIONAL 94 km OF 110kV OHL HAVE TO BE BUILT TO SATISFY INCREASED CONSUMPTION IN 110kV NETWORK.

Figure 4. Network structure at peak load in 2020 as foreseen by new generation strategy

Long Term concept of transmission network development

The long-term network development concept (see Figure 5.) attempts to secure capabilities for stable power supply of Kosovo demand, and for power export and exchanges with other power systems in region also after resynchronization of UCTE second zone with mainland of UCTE network.

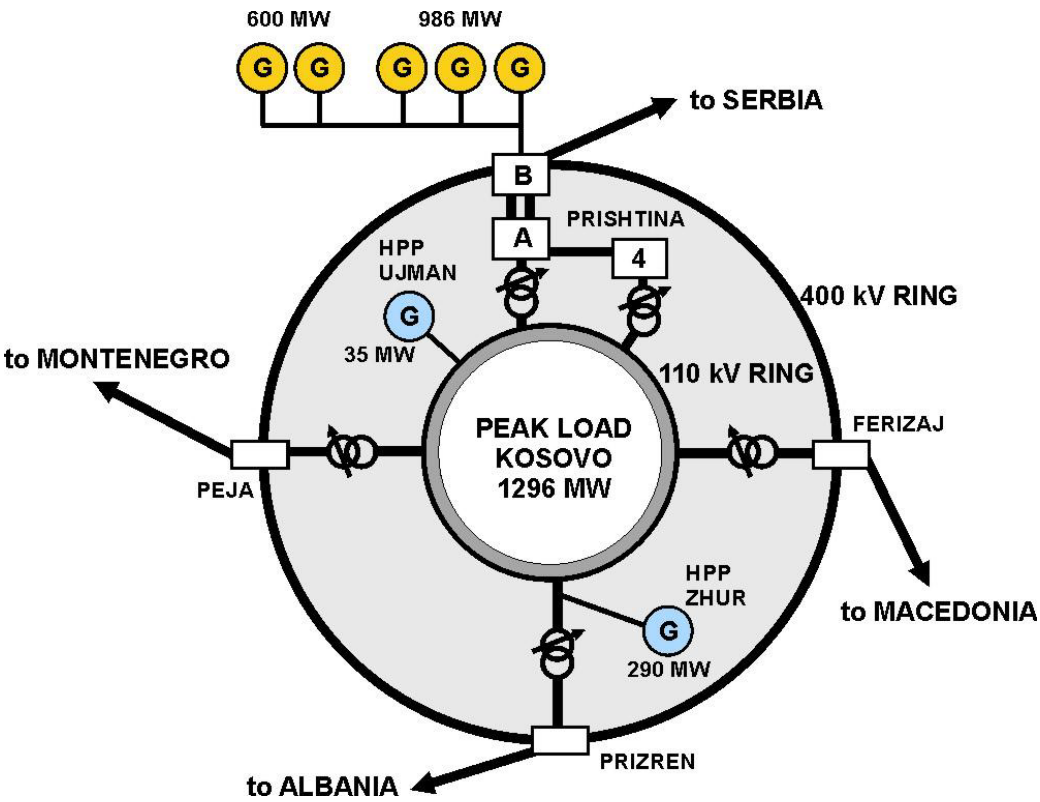

Figure 5. Long-term concept of Kosovo 400 kV network development

Distribution

One of the characteristics of the Kosovo distribution network is a small number of supply sources and high loads on 110/35kV and 35/10kV substations [Table 8. and 9.].
Furthermore, the distribution network is overloaded and its thermal capacity is exceeded during peak load conditions.
The present situation of Medium Voltage (MV) feeders in rural areas is critical due to their length and small conductor cross-sections, causing high voltage drops (up to 40% of the nominal voltage) and considerable ***technical losses***.
Reserve supply cannot be assured, particularly in the rural areas, due to the radial structure of the network.
Commercial losses continue to be persistently high over the last couple of years. Such a situation cannot be allowed to continue because it deteriorates the utility company ability to adequately operate the system, and makes it unsustainably dependent on donors' financial assistance. Therefore Strategy emphasis that reduction of commercial losses is of highest priority in the short-term action plan for the power sector.
The overview of distributions network extent is given in the tables bellow.

REDUCTION OF COMMERCIAL AND TECHNICAL LOSSES IS OF HIGHEST IMPORTANCE

Table 9. MV and LV network of Kosovo Distribution.

MV and LV network of Kosovo Distribution			
OVERHEADLINES		**CABLE LINES**	
Voltage level [kV]	Length [km]	Voltage level [kV]	Length [km]
0.4 kV	12,560	0.4 kV	1,830
0.4 kV (public lighting)	816	0.4 kV (public lighting)	1,565
10 kV	5,690	10 kV	171
35 kV	635	35 kV	171
Total Overhead lines	**19,701**	Total Cable lines	**3,566**

Table 10. Substations under Distribution management in 2003

Substations under Distribution management		
Transformation	**Number of Substations**	**Installed capacity [MVA]**
TS 110/TM	20	953 MVA
TS 35/10 kV	58	630 MVA
TS 10/0.4 kV	4105	1238 MVA
TOTAL	**4183**	

Distribution network development

To increase and maintain quality of electricity supply to the final consumers and to reduce technical losses, an adequate distribution network is an absolute precondition.

Strategy foresees that a number of new substations will need to be constructed in order to bring the supply sources close to the load centers, thus enhancing quality of supply, and reducing technical losses.

These new substations are shown in the figure bellow.

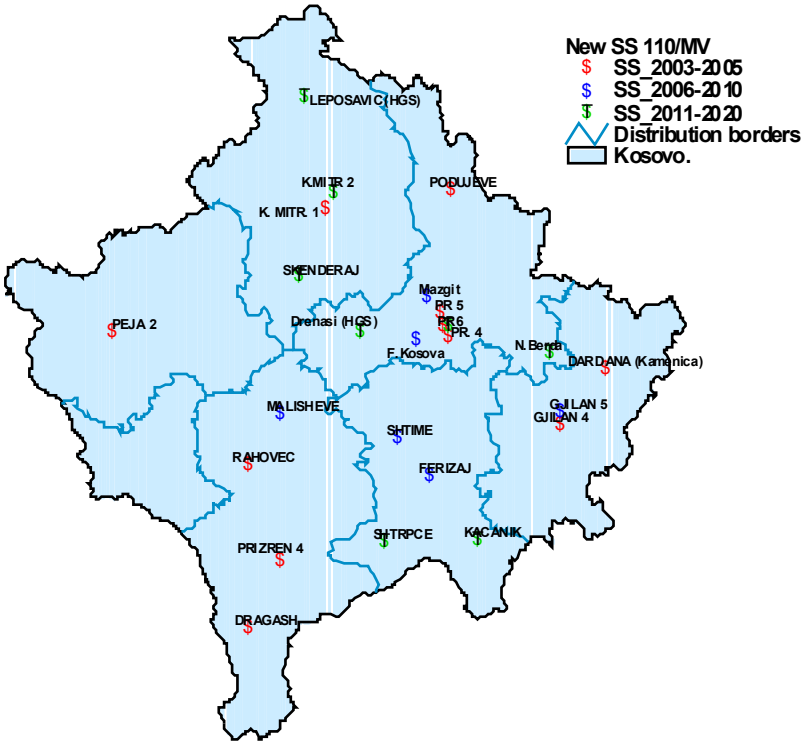

Figure 6. Perspective new SS 110/MV in Kosovo 2003-2020

2003 - 2008

By 2005, all consumers must have installed meters for measuring electricity consumption to eliminate that cause for the non-payment of electricity.
Construction of the most needed supply sources, i.e. 110/(20)10kV with the most urgently needed MV network reinforcements, should be accomplished according to criteria of network planning (permissible network element loads, permissible voltage drops under normal and under stand-by operating states).
It is anticipated that some 10 substations will need to be built, number of transformers replaced, and some additional 4000 km of distribution network lines at various voltages constructed.

2009 and beyond

Additional 110/x kV substations will need to be built as per actual demand development in order to provide adequate supply sources.

The voltage levels of 35 kV and 10 kV should be gradually abandoned, and 20 kV voltage level should be introduced instead.

In order to improve the supply reliability, creation of some loops in the 20kV network with short 20kV connections lines is anticipated. Then, to ensure minimal possible losses, optimal disclosure of this loop is needed on the section of the loop where the loop current is the smallest.

Dispatch

Developed in the late '80s, the existing data acquisition and control system is now in a very precarious condition. Many components were damaged or lost during the conflict and, in addition to this, KEK does not have all the information required to operate the system.
Considering the limited equipment installed, its current operating status, its technical and economic obsolescence, the best and quickest solution is to design and plan a totally new SCADA/EMS system to solve the huge problems that affect the dispatching activities, production and transmission power network.

A dispatch system is to be divided into three main integrated sub-systems, each of them designed and managed by a dedicated sub-project:

a. i) SCADA/EMS;
b. ii) Communication Network;
c. Sub-Station Adaptation works.

The priority is to complete hardware and software equipment for load frequency control of Electric Power System of Kosovo.

The information exchange requirement stemming from the establishment of the Regional electricity market, must be observed and taken into account while upgrading the Dispatching Center.

Environmental issues of Power Generation

Combustion installations within large thermal power plants use large amounts of fossil fuels and other raw material taken from the earth's natural resources and convert them into useful energy.

The combustion process leads to the generation of emissions to air, water and soil, of which emissions to the atmosphere are considered to be one of the main environment concerns. The most important emissions to air from the combustion of fossil fuels are SO_2, NO_X, particulate matter, heavy metals and greenhouse gases such as CO_2.

Environmental Issues
Emissions to Air
Waste Waters
Strained Waters
Electromagnetic Radiation
Noise
Ambient air concentrations
Ash disposal and land fill

Council Directives for environmental protection

There are certain standards that set maximum allowable levels of pollutant in the air, water or soil. It is suggested that environmental impacts of power generation in Kosovo should be within limits that allowed by Council directive 1999/30/EC requirements for ambient protection and Council Directive 2001/80/EC on the limitation of emissions for certain pollutants into air from large combustion plants:

*Emission limit values for **SO_2** – solid fuel*
Emission limit values expressed in mg/Nm^3 (O_2 content 6 %) to be applied by new plants with exception of gas turbines:

Type of fuel	50 to 100 MW_{th}	100 to 300 MW_{th}	> 300 MW_{th}
Biomass	200	200	200
General case	850	200	200

Where the emission limit values above cannot be met due to the characteristics of the fuel, installations shall achieve:
300 mg/Nm^3 SO_2 , or a rate of desulphurisation of at least 92 % in the case of plants with a rated thermal input of less than or equal to 300 MW_{th} and
in the case of plants with a rated thermal input greater than 300 MW_{th} a rate of desulphurisation of at least 95 % together with a maximum permissible emission limit value of 400 mg/Nm^3.

*Emission limit values for **NO_X** – solid fuel*
Emission limit values expressed in mg/Nm^3 (O_2 content 6 %) to be applied by new plants with exception of gas turbines:

Type of fuel	50 to 100 MW_{th}	100 to 300 MW_{th}	> 300 MW_{th}
Biomass	400	300	200
General case	400	200	200

*Emission limit values for **dust** – solid fuel*

Dust emission limit values expressed in mg/Nm^3 (O_2 content 6 %) to be applied by new plants with the exception of gas turbines:

50 to 100 MW_{th}	> 100 MW_{th}
50	30

Limitations on dust emissions for the existing plants in Kosovo [1].

Power plant Kosovo A
Before rehabilitation: 500 mg/Nm^3
After rehabilitation: 100 mg/Nm^3

Power plant Kosovo B
Before rehabilitation: 200 mg/Nm^3
After rehabilitation: 50 mg/Nm^3

Emission values for dust	
Unit	**(mg/Nm^3)**
A1	NA
A2	948
A3	3123
A4	NA
A5	910
B1	176
B2	325

Source: ESTAP

Power Plant Kosovo A

The problem with dust emissions is serious and apparently cannot be solved without major redesign of the boilers. An assessment of possible reduction in dust emission shows that the A units will not comply with current EU regulations even after recommended actions are taken. Units in Kosovo A are already at the end of their lifespan and further investment in these units may be questionable.

Power Plant Kosovo B

Considering that the remaining lifetime of B units is quite long, harmful effect of fine dust particles on human health, bad operation of existing electrostatic precipitators and relatively low costs of dust control equipment the rehabilitation of filters is proposed in years 2006 and 2008. Additionally harmonization with EU NO_x emission standards is planned on units B. The nitrogen oxides emission concentrations are in range of 600 - 950 mg/Nm^3. From environmental point of view it is better to reduce higher B2's NO_x emissions at first. In projection this will be carried out in the year 2008. On B1 the same intervention will take place in the year 2016. On units A no further investments in NOx control equipment is planned.

The main goal is that emissions of substances from existing plants will be bellow the limits defined in EU directives.

> By definition existing plants are the plants for which the original construction license or, in the absence of such a procedure, the original operating license was granted before July 1, 1987.

New plants are the plants for which the original construction license or, in the absence of such a procedure, the original operating license was granted on or after July 1, 1987.

The existing large combustion plants will fulfill the same obligations by January 1, 2008 at the latest.

All newly constructed power plants must completely fulfill the requirements of EU directives.

Ash dumps

Ash from the both power plants is currently transported by open belt conveyors and is deposited at dumpsites. No environmental protection measures in the dumpsites are taken to prevent ash spreading by wind. Deposition of ash in dumpsites must stop as soon as possible and instead use ash for backfilling of mined parts of the lignite mines. Closed belt conveyors should be used to prevent spreading of fine dust particles during transportation of ash.

Profile of Kosovo Power Utility Company - KEK

History

The first electric energy production facilities of KEK were constructed in year 1962 and the last one was constructed in 1984 [Table 4]. Existing KEK Power plants, gasification and heating plant are using Kosovo's large lignite reserves.

KEK products
Electric energy
Gas
Raw lignite
Dried lignite
Steam

KEK used to provide the following services:

- Raw coal for power plants and for the local market.
- Dried coal for the market (industry, households, in the past for production of synthetic gas).
- Production of electric energy in the thermal and hydro power plants as well as technological steam produced in industrial heating plant.
- Production of medium quality synthetic gas from the dried lignite.
- Production of artificial fertilizers (out of function).
- Transmission and distribution of electric energy.

In the period between 1962 and 2002 some 115 TWh of electric energy was produced by KEK where 45% was exported. Balance of electric energy production is shown in Figure. 7. were it can be clearly seen that up to year 1999 Kosovo was net electricity exporter.

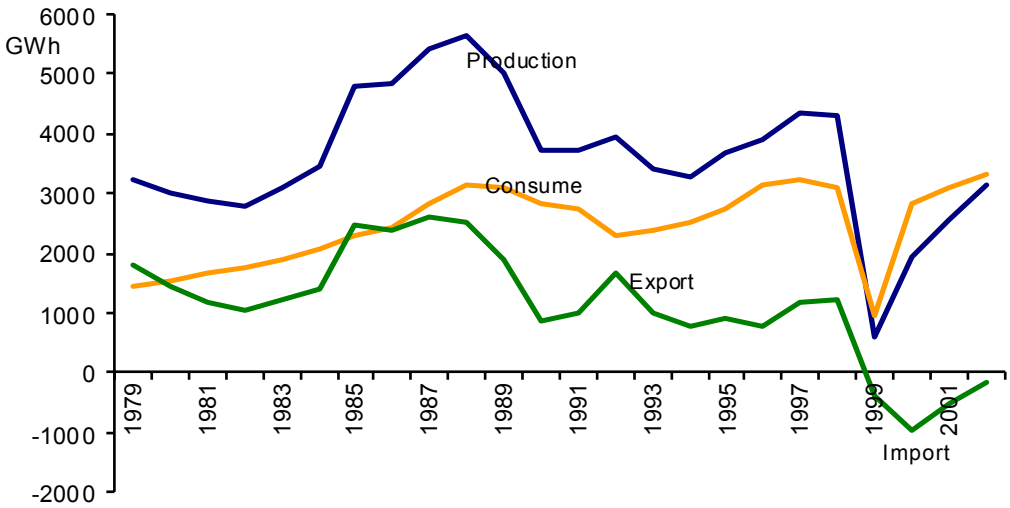

Figure 7. Balance of production, consume and energy exchange for period 1979-2002

Economical importance of KEK

KEK was an engine for development of local power and mining industry and energy sector support businesses, development of professional capacities and providing employment for large number of people.

KEK is currently the largest employer in Kosovo with some 9,500 employees.

Current KEK issues

KEK nowadays has a number of problems resulting from economical and political events in last decade. The main issues are:

- Old plants with exceeded lifetime
- High commercial and technical losses
- High operational cost (low production due to old equipment and a large number of outages)
- Lack of financial means for rehabilitation and dilemma which facilities should be rehabilitated, and which one closed down
- Ongoing restructuring and reorganization
- Environmental issues
- Political uncertainty for foreign investors.

KEK issues
Old production facilities
Uneconomical exploitation
High operational costs
Restructuring and Reorganization
Absence of commercial investments

POWER SECTOR RESTRUCTURING

Restructuring of the electric utility industry has received much attention in recent years because of customers benefits derived from deregulation. A growing number of jurisdiction share that electricity prices should be determined primarily by the market rather than by regulation, and that competition should lead to improved efficacies and increased consumer choice.

Therefore the Strategy supports the power sector restructuring to facilitate competition in Kosovo electricity market place, which will enable the following benefits:

- More efficient use of existing generation assets;
- Investment in new capacity;
- Improvements in security of supply;
- Transfer of risk from taxpayers to investors.

Kosovo would be exposed to several potential risks if it were to restructure in an inappropriate manner:

Higher costs, particularly in the near term, arising from restructuring costs;
Convergence of market-based prices with higher-priced neighboring jurisdictions, thereby impacting Kosovo competitive advantage.

It is important that regulatory framework for restructuring evolves internally and is harmonized with regional developments. Kosovo has to actively participate in regional market development, taking care of the internal specifics that will determine Kosovo position toward regional market establishment and operation.

Open Access to transmission and unbundling

To meet EU directives requirements for non-discriminatory, open transmission access, KEK is required to separate accounting for its generation, transmission, and distribution divisions, including ancillary services.

An independent (in management and legal sense) Transmission System Operator (TSO) has to be established, but will continue to be owned by Government.

Encouraging small power producers, green energy, cogeneration

The Strategy recognizes the importance of distributed generation, including cogeneration, and therefore encourages development of cogeneration and “green energy” by small power producers.

It is a desirable objective for environmental and rural economic development to encourage growth of renewable power industry in Kosovo.

The Regulatory authority will be asked to assure for the small generators an open access to the transmission and distribution system to wheel “green” power directly to customers if they so choose, or to sell to KEK Public supply at a

regulated price, subject to the primary energy source, and total amount of the green energy in the system.

Net metering for micro-generators (less than 50 kW) is also encouraged to allow small farms and business to interconnect micro generation units with the KEK system. Net metering enables individual customers or small rural businesses to offset their requirement for purchased electricity by installing micro generators, typically employing wind, solar, bio mass or mini-hydro power systems. Being interconnected with the grid means that there is always a demand for the power as it is being produced. As implied by the term "net-metering", customers partially offset the costs of their purchased energy by the quantity of energy they bank with KEK from using their micro-generators.

REGULATORY FRAMEWORK IN KOSOVO

Proceeding in an efficient manner with the proposed restructuring requires an adequate regulatory framework. Since regulatory work is still in its infancy, Strategy will outline the main concept for the regulation, market structure, pricing, liberalization and privatization.

The whole regulatory framework shall contain several levels of regulation, such as:

- Laws (approved by legislative body), as primary legislation,
- Secondary legislation, and decrees issued by Executive bodies,
- Licenses issued by the regulatory authority,
- Codes, internal system regulations prepared by the transmission system operator and approved by the regulator,
- Business conduct rules regarding the relationship of licensees and consumers
- Resolutions, guidelines issued by the regulator.

The primary legislation, approved by Legislators shall contain laws on energy, power sector, district heating, mining and regulation. The draft laws should be prepared in a coherent way taking into consideration the Directives of the European Union and the Memorandum of Understanding of Athens Forum.

The **Energy law** shall reflect the general energy policy and energy conservation commitments.

A **Power System law** shall comply with the EU Directives regarding especially regulated Third Party Access (rTPA), and new capacity authorization procedures. This law shall set the basic framework of the market structure of the industry, the general obligations and rights of licensees and the basic rules for price setting.

The **District heating law** shall determine the public service obligation of licensed heat suppliers and authorize the local municipalities, and the regulator to regulate and control this sector.

The **Mining law** shall set conditions for lignite exploitation and determine the basic royalty system.

The **Law on Economic Regulation** shall establish the autonomous regulatory authority, with separate legal mandate, determine the responsibilities of the regulator, create the licensing system, set professional appointment and withdrawal criteria of Commissioner(s), set exception from civil service (Government salary rules) for staff, create reliable funding for the authority, determine the procedure of appeal (challenge) against the decisions of the regulator.

The different laws elements of primary legislation shall authorize the Government and/or the Minister(s) to issue decrees (as secondary legislation) regulating the following fields:

- Enforcement of the Power law and law on economic Regulation (setting the Market Structure details, the rules of licensing, monitoring; the rights and obligations of the licensees and consumers regarding public supply, network access)
- Regulation of export, import, transit and basic allocation rules of cross border network capacity
- Emergency rules
- Eligibility criteria for consumers
- Stranded cost rules
- Pricing and tariff basic rules for end-users and for network charges.

The law on Regulation and the Government Enforcement decree shall determine different type of licenses, basic licensing criteria with the license application rules. These regulations should give autonomy (freedom) to the regulator setting license conditions, reporting requirement, and compliance-monitoring rules. The other elements of primary, secondary legislation shall give guidance to the regulator on pricing and on activities (e.g. approval of share transfer, grid code approval).

The legislations should give balanced schedule of putting into force the elements of regulatory framework. This schedule should give the possibility:

for the Government to issue enforcement decrees in between publish laws and puting them into force, for the industry to be familiar with the license-application criteria before application, for the regulator to evaluate the license applications and to issue licenses before the law putting the new market structure into force, for the transmission system operator to prepare the necessary codes and to ask for the approval of the regulator before market opening.

Market Structure

Limited number of generators and large end-users, small market, and still high level of non-payment necessitate for the time being the supply security of public supply at regulated end-user price. Two segments of the market shall be set up. In the public segment the supply chain contains public generators, public supplier(s), "captive" (non-eligible, not switching) consumers.

In the open market segment the eligible consumers could buy capacity and power from free generators and from traders (trough bilateral contracts) and on the regional power exchange(s).

The discrimination and cross financing between the two segments must be avoided.

The network charges and public supply end-user tariffs shall be regulated.

The Transmission System Operator (TSO) shall be established as separate legal entity with exclusive right and obligation on operation, maintenance and development of transmission network (together with interconnections) and on system operation. The TSO shall be responsible for the procurement of capacity-reserves, providing ancillary services, operating balancing market, harmonizing network development planning, ensuring third party access to networks.

The public suppliers(s) shall have obligation to supply those consumers, who are not eligible ("captive") and who left the free market segment (going "back" to the regulated supply). The supplier(s) shall serve the costumers on regulated price. For some years the legal framework could allow the distributor(s) and public supplier(s) to remain in one legal entity with accounting separation.

The traders supplying eligible consumers should have separate legal mandate.

The power exchange (PX) (organized electricity market) could be created on regional level. Generators with free capacity (over public service obligation) could offer their capacity to traders, to local and foreign eligible consumers and to PX.

Pricing Concept

The primary and secondary regulation shall determine pricing methods, tariff setting procedures, key principles of justified cost based network charges.

An important objective for any restructuring of Kosovo electricity industry, is protection of price advantage for the Kosovo customers based on "cheap" local lignite, and avoidance of convergence to the higher prices in the region, at least in the mid term period.

The system of network charges (transmission and distribution) shall provide incentive to reduce cost, increase efficiency of network operation, enhance bill collection, and decrease network losses and to develop networks. The

performance based network charges shall ensure the required level of continuity of supply (together with supply quality standards).

The cross border charges are determined by the CBT (Cross Border Tariffs) mechanism of the ETSO (European Transmission System Operators) / CEER (Council of European Energy Regulators).

The establishment of obligatory purchase system and setting obligatory purchase prices could support renewable resources, combined heat and electricity generation, waste energy and distributed generation.

The billing and internal settlement system among licensees should ensure the adequate cash flow of the market players.

Liberalization

The Power law shall establish regulated TPA, as minimum criteria for free customer choice. The Government shall determine the eligibility criteria based on the structure of the end-users (industry/service/household) and based on the available generation capacity (local free generation capacity, import possibilities).

Efficient free market could be established – in medium term – on regional level only; that is why access rules for the grid, for the inter-connectors are very important as well as clear capacity allocation rules in case of network congestion. These conditions are important for the potential new IPPs also, who shall export to the regional market.

Independently from the operation and risk of the free market segment the eligible consumers shall have the right to go “back” to the public segment, supplied by public supplier(s).

The Government shall establish information campaign providing assistance to the eligible consumers changing supplier(s).

Privatization

The participation of private (local and foreign) investors in the operation/maintenance and development of different segments of the power industry is necessary.

While keeping the mineral resources under state control, private investors could be involved in the operation of existing lignite mines and in the opening of new mines. In case of market conditions the lignite price shall based on the market price (otherwise regulated).

The benefit of “cheap” and available mineral resources should ensure the cost-recovery of mining operation, reasonable profit of private investors and adjusted level of royalty for the state budget.

This royalty income of the Government could be the resource for different type of government support, such as for renewable, for low-income consumers, for new industries.

The available fuel resources (lignite) could give the chance for new power plant construction and operation. New Independent Power Producers (IPPs) could supply eligible consumers and could export to regional markets. These IPPs financed, constructed and operated by private strategic investors will not be regulated. The private involvement could require medium/long term Power Purchase Agreements (PPAs), of which time-period should be limited ensuring free capacity on supply side in medium term.

The reduction of the high level of network losses and non-payment will require private participation in the distribution and public supply business. More options, like share transfer (direct capital involvement) leasing/concession and management contracts could ensure the knowledge transfer and profit orientation of these licensees.

The TSO should remain under state control in medium term.

Traders supplying eligible consumers shall be established by private investors, although KEK can establish its own trading arm.

ELECTRIC POWER SYSTEM DEVELOPMENT STRATEGY CONSOLIDATED OBJECTIVES

- Upon Strategy adoption, to develop a coordinated action plans for implementation of the Strategy's objectives listed bellow;
- To implement an immediate action plan aiming at reduction of commercial losses and restoration of 24 hours a day supply service.
- To maintain continued access to secure, reliable, and affordable electricity produced in an environmentally responsible manner.
- To phase in competition in the Kosovo electrical industry.
- To create the regulatory and business environment that will attract independent power producers.
- To start preparations for construction of a new power plant by an IPP and with IFI involvement.
- To pursue cooperation with neighboring power systems, and optimize electricity supply through power exchanges with neighbors.
- To develop policy framework that will encourage small power producers to generate electricity from renewable source and development of cogeneration opportunities.
- To reduce environmental impacts of electricity production, and to increase efficiency of existing power plants.
- To develop a robust transmission system that will be a basis for a competitive power generation for the regional market.
- To upgrade distribution system so that technical losses will be reduced, and security of supply increased.
- To modernize the dispatching center in line with information exchange requirements on the future regional electricity market.

Actions to achieve objectives 2003 – 2008

Immediate

- To prepare an action plan for dramatic revenue collection increase;
- To prepare arrangements for a stand-by facility for electricity import to ensure restoration of 24 h/day power supply;

Generation

- To define conditions for construction of the new power plant by an IPP;
- To pursue actively a potential investor so that a new plant may be in operation by 2008-2009;
- To prepare lease/concession offers for operation, maintenance and upgrade of Kosovo A power plant;
- To start working on a plan for power exchange with Albania;
- To prepare bankable projects in the sector;
- To prepare an environmental management program for all power plants;
- To prepare urgently medium term human resource development plan;

Transmission and dispatch

- To establish an independent TSO by the end of 2004;
- To prepare a Grid code for operation of the electricity market;
- To start preparation for and construction of 400 kV to Albania;
- To introduce load-frequency control;
- To upgrade the dispatching center telemetry, SCADA and EMS capability;
- To prepare bankable projects in the sector;
- To prepare an environmental management program for transmission;
- To prepare urgently medium term human resource development plan;

Distribution

- To install urgently missing electricity meters at the consumers;
- To increase and maintain high level of revenue collection;
- To carry on necessary network upgrades in order to reduce technical losses;
- To increase quality of power supply;
- To work on consolidation of voltage levels;
- To standardize equipment and procedures utilized in distribution system;
- To work on criteria for definition of eligible customers;
- To prepare trading code for power supply in market conditions;
- To prepare bankable projects in the sector;
- To prepare an environmental management program for distribution;
- To prepare urgently medium term human resource development plan;

KEK restructuring

- To complete transformation from vertically integrated monopoly, into a competitive power supply business;
- To sell/lease/outsource non-core businesses;
- To define the roles and procedures for Public generators and Public suppliers
- To prepare KEK development strategy, with the view of the future competitive regional electricity market;
- To prepare bankable projects in KEK;

Environmental issues

- To establish environmental management within KEK,
- To start with implementation of environmental monitoring according to the EU standards,
- No further investments are planned for environmental NOx control equipment for units in Kosovo A,
- Ash dumps must be closed. Ash will be used for backfilling of already mined parts of lignite mines.
- In year 2006 and 2008 a rehabilitation of dust control equipment and the rehabilitation of filters should be implemented,
- Interventions to reduce NO_x emissions has to be carried out on Unit B1 and B2;
- All newly constructed power plants must completely fulfill the requirements of EU environmental standards.

Regulatory framework in Kosovo

- To complete the regulatory framework for electricity market opening;
- To establish an independent regulatory authority;
- To decide on financing mechanism for the regulatory authority;
- To harmonize regulatory developments in Kosovo with these in the region;
- To establish pricing methodology that will reflect competitive advantage of local lignite for local consumers;
- To prepare medium term human resource development plan;

Regional electricity market

- Adhere to the commitments from the Athens memorandum;
- Prepare an action plan on completion of the transformations required by the Athens process;
- Continuously promote Kosovo power investment projects of regional importance on all regional forums;

2009 and Beyond

- Update demand forecast and review plans for security of supply;
- Correspondingly, update energy policy in a regular and transparent manner;
- Determine longer-term stages, if any, of increased competition;
- Update and continue to implement generation expansion plan with the view of new reality of having a functional regional electricity market;
- Update and continue to implement transmission system development plan with the view of new reality of having a functional regional electricity market;
- Update and continue to implement distribution development plan;
- Review regulatory practices and experience, and amend the regulatory framework if necessary;
- Pursue further market liberalization and privatization

GOVERNMENT ROLE AND RESPONSIBILITY

A state energy authority (Ministry or Department of Energy) is responsible for energy policy creation and decision making for the whole of the energy sector, including power. It should promote the market reforms and good governance that is essential to effective reforms.

The legislations shell be approved that will define roles and responsibilities for regulating electricity industry among parliament, government, an independent energy regulator, public generators and suppliers, and a transmission system operator.

It is important to separate policymaking function form regulatory enforcement and from functioning of energy companies. However, Government must take care for collection, analyses and dissemination of reliable and detailed supply and demand energy statistics, which are necessary for policymaking, market functioning and regulation.

Regulator reviews and approves tariffs, prices, and new generation capacities and monitors the market. It must ensure transparency and accountability of the market players, and engage them to improve their economic, social and environmental performance.

It is a mandate of the regulator to assure that Public supplier fulfills its "obligation to supply" electricity to residents and businesses in a reliable manner and at economic prices.

Other government bodies, such as Ministry of Environment and spatial planning, Ministry of Labor, have an important role in overseeing electricity industry's other social, economic and environmental responsibilities.

On a broader scale, government responsibilities include the availability of electricity at a competitive rate for existing and future economic purposes; ensuring, based on a diversity of sources, that there is security of supply; and monitoring introduction of technology, environmental improvements, and new electricity sources.

Reference:

[1]: World Bank Grant no. TF-027791. (ESTAP) Energy Sector Technical Assistance Project, Prishtina, July 2002

[2] D. Pesut, Z. Kosnjek, M. Zeljko: Additional work on the Demand Forecast and Least Cost Power Generation Development modules of the ESTAP study, November, 2002

[3]: *Decon & SwedPowers* "Regional Study of Electricity Supply and Demand in South East Europe" for KfW (Kreditanstalt für Wiederaufbau). November 2002

[4]: *Kresimir Bakic*, TRANSMISSION NETWORK STRATEGY" Possibilities of the
interconnection network considering a new export oriented generation strategy", Prishtina November 2002